ITEM NO.	PART NUMBER	DESCRIPTION	MATERIAL	DRAWING #	QTY.
1	RE-AS-RA39225 B	REAR ASSEMBLY, RL3X60		12-1426	1
2	FP-RL-APDS-1a	ARM PLATE, DRIVER, REEL LIFT	3/8" PLATE	12-2401	1
3	FP-RL-APPS-1a	ARM PLATE, PASSENGER, REEL LIFT	3/8" PLATE	12-2404	1
4	FP-RL-APINNER-2a	ARM PLATE, INNER, REEL LIFT	3/8" PLATE	12-2433	2
5	FP-RL-APEC	ARM PLATE END CAP	3/8" PLATE	12-2432	2
6	FP-RL-RA GUSSET	GUSSET, REAR ASSEMBLY, REEL LIFT	3/8" PLATE	12-2413	2
7	FP-RL FLPL-FILLER 101	FILLER SHEET, 101", REEL LIFT	1/2" HRS	12-2414	1
8	ST 3.5x3.5x.3125 L58.375	REEL LIFT BARE ARM	SQ 3-1/2x3-1/2x5/16	12-1501	2
9	FP-RL-ARM SPCR	ARM SPACER, REEL LIFT	1/2" HRS	STOCK	2
10	FI .25 x 4.5 L 3.75	LENGTH: 3-3/4"	1/4" HRS	STOCK	2
11	FP-RL-ECDS_WELD B	END CAP WELDMENT, DRIVER, REEL LIFT		12-1403	1
12	FP-RL-ECPS_WELD B	END CAP WELDMENT, PASSENGER, REEL LIFT		12-1406	1
13	FP-HF8-AP	PLATE, ANCHOR, HYDRA FIGURE 8	5/8" HRS	12-2481-7	1
14	HD-CL TW500WP	WELD PLATE, 8M3K	ASTM A36 Steel	STOCK	2

REVISIONS			
REV.	DESCRIPTION	DATE	APPROVED
A	INITIAL RELEASE	7/22/2020	
B	CHANGE ITEM 10	9/2/2020	

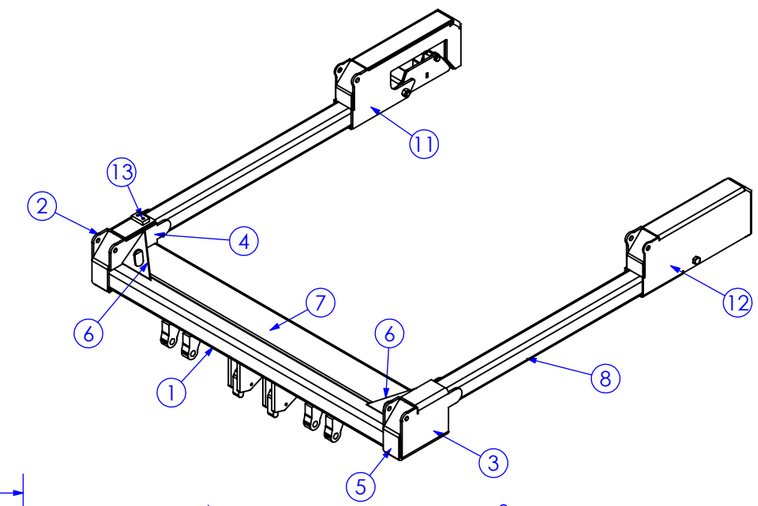

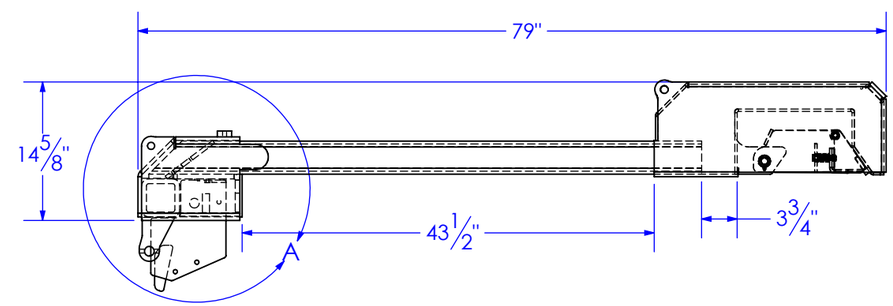

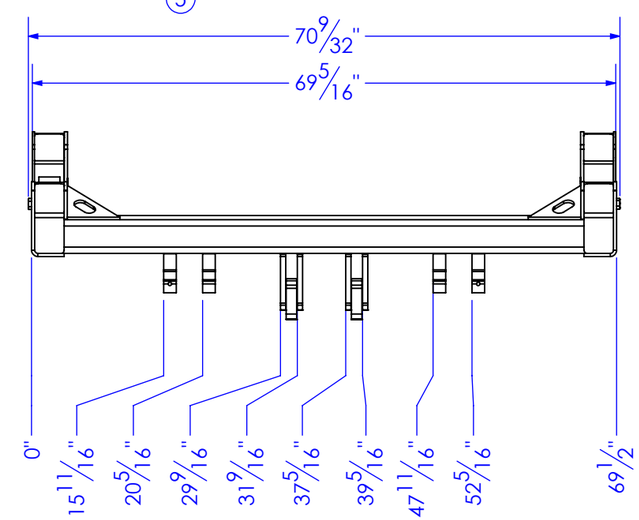

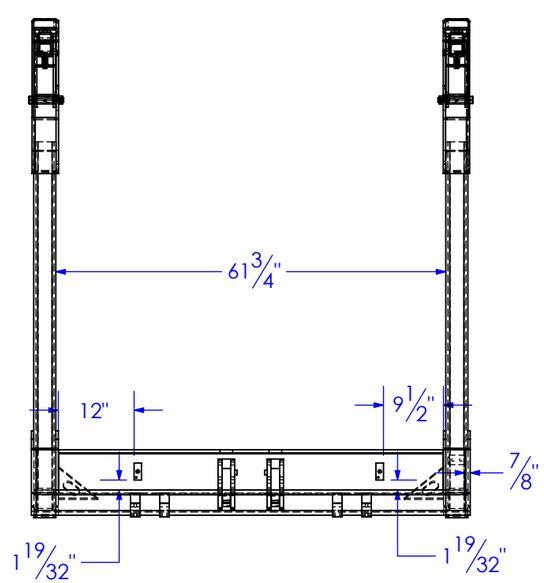

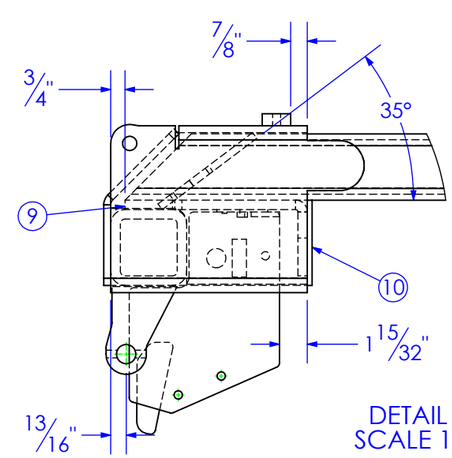

DETAIL A
SCALE 1 : 8

PROPRIETARY AND CONFIDENTIAL
THE INFORMATION CONTAINED IN THIS DRAWING IS THE SOLE PROPERTY OF TRIPLE C INC. ANY REPRODUCTION IN PART OR AS A WHOLE WITHOUT THE WRITTEN PERMISSION OF TRIPLE C, INC IS PROHIBITED.

UNLESS OTHERWISE SPECIFIED:
DIMENSIONS ARE IN INCHES
TOLERANCES:
FRACTIONAL ± 1/16
ANGULAR: MACH ± 1 BEND ±
TWO PLACE DECIMAL ± 010
THREE PLACE DECIMAL ± 005

MATERIAL

DO NOT SCALE DRAWING

	NAME	DATE
DRAWN	ETHAN	2/24/2021
PART #	Part #	
ASM #	SUB-RL-RA 3X60	

COMMENTS:

REAR ASSEMBLY, REEL LIFT

P.O. BOX 248, SABETHA, KS 66534
(785) 284-3674 FAX (785) 284-3931

REEL LIFT HYDRABED

SIZE	DWG. NO.	REV
B	12-1427	B

SCALE: 1:24 | WEIGHT: 594.74 | SHEET 1 OF 1